Automotive GenAI Visualizer

Course Name: Datagami Skill Based Course – Generative AI

Institution Name: Medicaps University

Sr no	Student Name	Enrolment Number
1.	Yashit Jain	EN22EL301069
2.	Yugal Bisani	EN22EL301070
3.	Yashasvi Nannaware	EN22EL301068
4.	Yuvraj Singh Sikarwar	EN22CS3011129

Group Name: 03-D10

Project Number: GAI-16:

Industry Mentor Name: Mr Rishab

University Mentor Name: Mrs Divya Kumawat

Academic Year:2026

TABLE OF CONTENTS

1. **INTRODUCTION**
   - 1.1 Overview
   - 1.2 Motivation
   - 1.3 Objectives
2. **PROBLEM STATEMENT & OBJECTIVES**
   - 2.1 Problem Statement
   - 2.2 Project Objectives
   - 2.3 Scope of the Project
   - 2.4 Limitations
3. **LITERATURE REVIEW**
   - 3.1 Existing Systems
   - 3.2 Need for Proposed System
4. **PROPOSED SYSTEM**
   - 4.1 System Overview
   - 4.2 Key Features
   - 4.3 Workflow
5. **SYSTEM DESIGN**
   - 5.1 Architecture Design
   - 5.2 System Architecture Diagram
   - 5.3 Process Flow
   - 5.4 Information Flow
   - 5.5 Component Design
   - 5.6 Data Flow
6. **TOOLS & TECHNOLOGIES**
   - 6.1 Software Tools
   - 6.2 Hardware Requirements
7. **RESULTS & OUTPUT**
   - 7.1 Screenshots
8. **CONCLUSION**
   - 8.1 Summary
   - 8.2 Learning Outcomes
9. **FUTURE SCOPE**
   - 9.1 Enhancements
10. **REFERENCES**
    - 10.1 Sources

1. INTRODUCTION

1.1 Overview

The Automotive GenAI Visualizer is an advanced web-based application that utilizes Generative Artificial Intelligence to create realistic automotive images from simple user inputs such as text descriptions or hand-drawn sketches. The system is designed to bridge the gap between creativity and technology by allowing users to generate high-quality car visuals without requiring professional design expertise.

The application is built using Streamlit and integrates powerful AI models such as Stable Diffusion for image generation. It provides a fast, interactive, and user-friendly platform where users can experiment with different automotive designs in real time.

This project demonstrates how AI can automate complex design processes and make them accessible to students, designers, and enthusiasts.

1.2 Motivation

Traditional automotive design involves the use of expensive software like CAD tools and requires skilled professionals. This makes it difficult for beginners and students to explore their creativity.

The motivation behind this project includes:

- Reducing dependency on costly design tools
- Providing a platform for quick visualization of ideas
- Encouraging innovation using AI
- Making design accessible to non-technical users
- Automating the manual design process

1.3 Objectives

The major objectives of this project are:

- To develop a web-based application for automotive image generation
- To enable users to input text prompts or sketches
- To generate realistic images using AI models
- To provide real-time processing and output
- To ensure ease of use with a simple interface
- To allow users to download generated images
- To integrate AI technologies into practical applications

2. PROBLEM STATEMENT & OBJECTIVES

2.1 Problem Statement

Designing automotive concepts is a complex, time-consuming, and resource-intensive task. It requires specialized tools, technical knowledge, and significant effort. Many individuals, especially students and beginners, do not have access to such resources.

There is a need for a system that simplifies this process by allowing users to generate automotive designs easily using artificial intelligence. The goal is to create a solution that reduces time, effort, and cost while maintaining high-quality output.

2.2 Project Objectives

- To build an AI-powered image generation system
- To provide both text-to-image and sketch-to-image functionality
- To ensure fast and efficient processing of user inputs
- To create a scalable and flexible system
- To improve user experience through an interactive interface
- To integrate multiple technologies like AI, cloud, and web development

2.3 Scope of the Project

The scope of the project includes:

- Generating automotive images using AI
- Supporting multiple input formats (text and sketch)
- Providing real-time output generation
- Deploying the system on cloud platforms
- Allowing users to download generated images

2.4 Limitations:

- The system is limited to automotive designs only
- Performance depends on internet and hardware
- High computational resources are required for faster processing

3. LITERATURE REVIEW

3.1 Existing Systems

There are several AI-based image generation tools available such as DALL·E, MidJourney, and Stable Diffusion. These tools can generate images from text prompts but are general-purpose systems and not specifically designed for automotive visualization.

3.2 Need for Proposed System

The existing tools lack domain-specific customization for automotive design. Therefore, there is a need for a system that:

- Focuses specifically on vehicle design
- Provides better customization options
- Is easy to use for beginners
- Offers faster and more relevant outputs

4. PROPOSED SYSTEM

4.1 System Overview

The proposed system is an AI-based application that generates car images from user inputs. It follows a client-server architecture where the frontend interacts with the backend, and the backend processes requests using AI models.

The system ensures smooth communication between different components and provides real-time results.

4.2 Key Features

- Text-to-image generation using AI
- Sketch-to-image conversion
- Prompt enhancement using LLM
- Real-time image generation
- Download and save functionality
- User-friendly interface
- Configurable styles and resolutions

4.3 Workflow

The working process of the system is as follows:

1. The user enters a text prompt or uploads a sketch

2. The system validates the input for correctness
3. The prompt is optionally refined using AI
4. The Stable Diffusion model processes the input
5. The system generates a high-quality image
6. The output is displayed to the user
7. The user can download or regenerate the image

5. SYSTEM DESIGN

5.1 Architecture Design

The system architecture consists of multiple components including the user interface, backend server, AI model, and storage system. These components work together to process user input and generate output efficiently.

5.2 System Architecture Diagram

The sketch below illustrates the four-tier system architecture — drawn to show the component layout and data pathways at a glance:

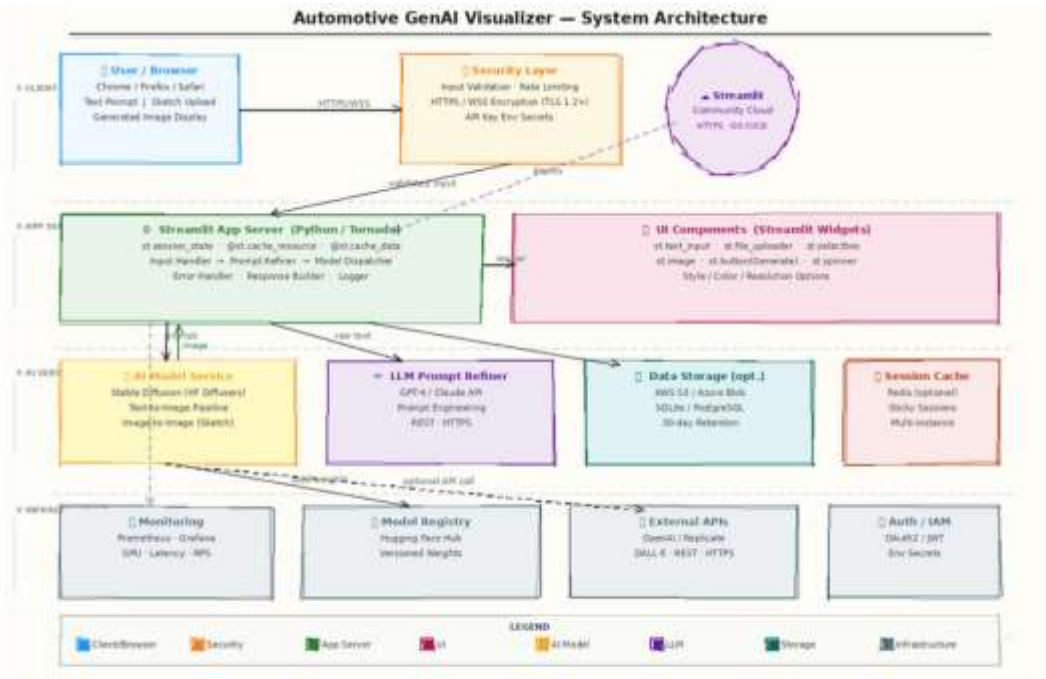

Figure 1 — System Architecture (sketch style)

5.3Process Flow

The diagram below shows the step-by-step process from the moment a user opens the app to receiving a generated image. Decision points (validation, LLM refinement) and the retry loop are explicitly shown:

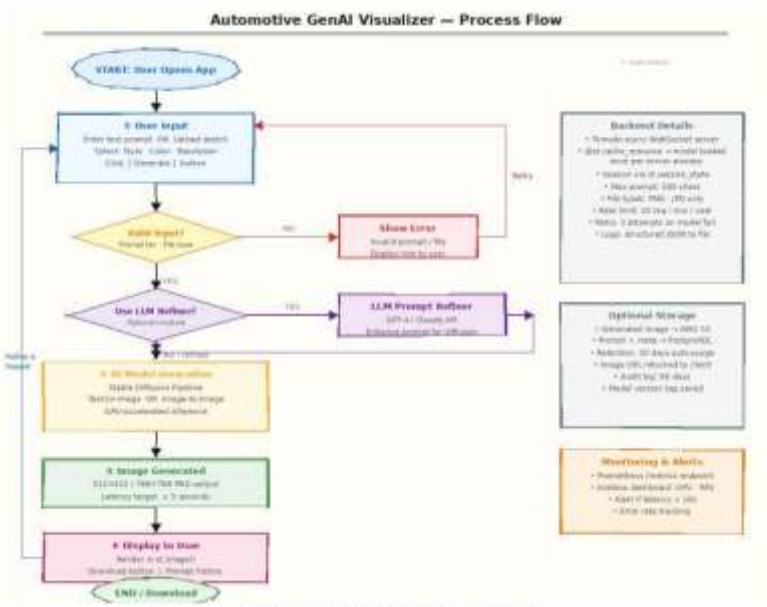

:

Figure 2 — End-to-End Process Flow Diagram

5.4 Information Flow

The diagram below maps how data moves between every node — user, security layer, app server, AI model, storage, and monitoring:

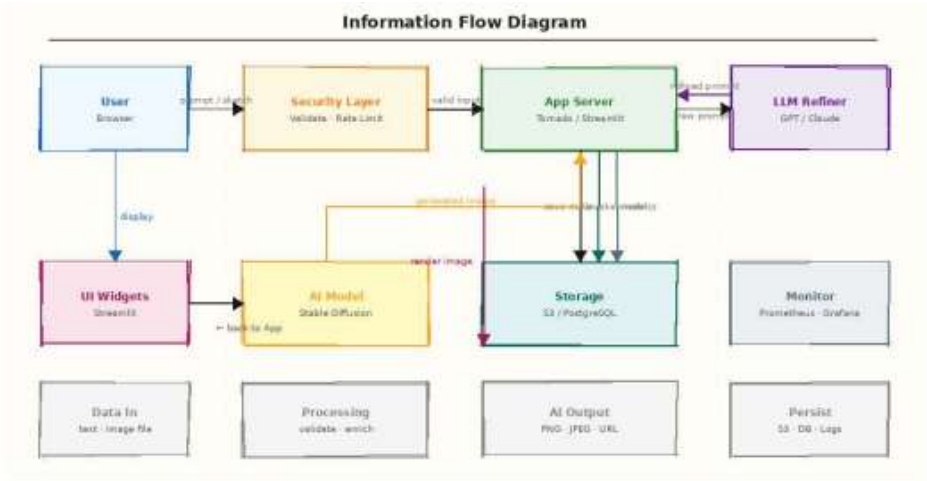

Figure 3 — Information Flow Diagram

5.2 Component Design

The system is divided into the following components:

- **User Interface:** Handles user interaction and input
- **Backend Server:** Processes requests and manages logic
- **AI Model:** Generates images using machine learning
- **LLM Module:** Enhances user prompts
- **Database & Storage:** Stores images and metadata

5.3 Data Flow

The data flow in the system follows a structured path:

- User input is sent to the server
- The server processes the input
- AI model generates output
- Output is stored and displayed

6. TOOLS & TECHNOLOGIES

6.1 Software Tools

- Streamlit for frontend
- Python for backend
- Hugging Face Diffusers for AI model
- OpenAI / Claude API for prompt refinement

6.2 Hardware Requirements

- Minimum 8GB RAM
- Internet connection
- GPU (optional for better performance)

7. RESULTS & OUTPUT

7.1 Screenshots

- **Home page**

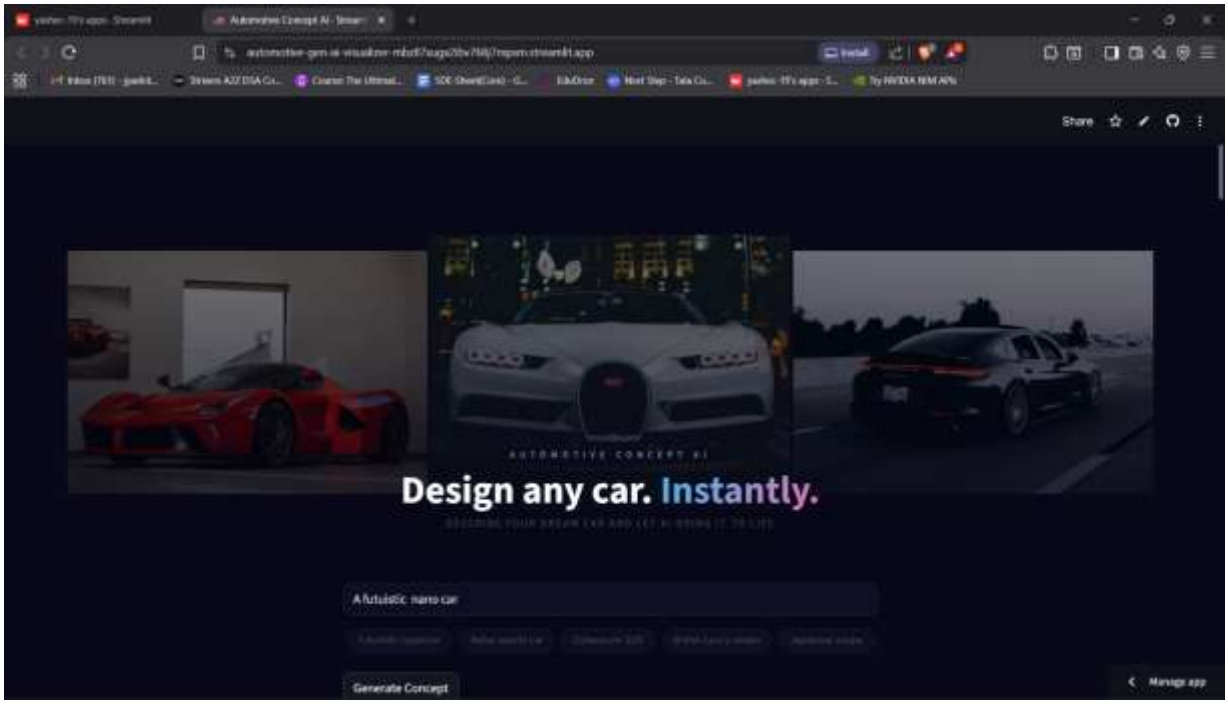
Share
Design any car. Instantly.
A futuristic nano car
Generate Concept
Manage app

- **Output**

8. CONCLUSION

8.1 Summary

The Automotive GenAI Visualizer successfully demonstrates the application of Generative AI in automotive design. It simplifies complex design processes and provides an efficient and user-friendly solution for generating high-quality images.

8.2 Learning Outcomes

- Understanding of AI and machine learning models
- Experience in web development
- Knowledge of cloud deployment
- Integration of multiple technologies

9. FUTURE SCOPE

9.1 Enhancements

- Integration of 3D model generation
- Development of mobile application
- Advanced customization options
- Faster processing using optimized models
- User login and personalization features

10. REFERENCES

10.1 Sources

- Hugging Face Documentation
- Streamlit Documentation
- AI Research Papers
- Online tutorials and articles